RHEON
Discovering the Future of Food

Encrusting Machine
Multi-row model

VERY HIGH SPEED MULTI-NOZZLE ENCRUSTING AND DIVIDING MACHINE FOR HIGH QUALITY SAVORY PRODUCTS.

MEGA FORMER

Washdown spec with high-pressure water

MN200 MN400

The "Mega Former" produces a wide variety of savory products such as meat, fish and poultry with high production capacity.

- *The "Cycloid Pump" transmits materials accurately for consistent production.*
- *The "Turning Shutter" divides and forms filled and non-filled products beautifully at very high speed.*
- *Made of SST body making it rust and stain resistant and very hygienic. The outer panel has a bead blasting finish for easy cleaning.*

Filled Gnocchi

Chicken Cordon Bleu

Cheese filled Chicken Nugget

Cheese filled Minced Meat Cutlet

Cheese filled Hamburger

MN200 Two Rows Encrusting Model

PRODUCT WEIGHT RANGE: 20 - 250 g
PRODUCTION CAPACITY (MAX.): 24000 pcs./h

MN400 Four Rows Encrusting Model

PRODUCT WEIGHT RANGE: 10 - 120 g
PRODUCTION CAPACITY (MAX.): 48000 pcs./h

Many optional devices and parts are available for additional products

Forming Conveyor

The Secondary forming option on the forming conveyor shapes the products consistently.

Row Multiply Conveyor

Doubles product rows from 2 into 4 and 4 into 8. This provides greater latitude in the following processes.

Additional Hopper

High capacity hoppers (240 liters) can be placed on either end. Very simple to attach and remove.

Press Roller with Flour Duster

Presses down the top of the product using the press roller with flour duster.

Various Types of Products (Examples)

Meat filled Croquette

Kartoffel Knödel

Juicy Hamburger

Meatball

Sausage

Dimensions

(Unit: mm)

Two Rows Encrusting Model

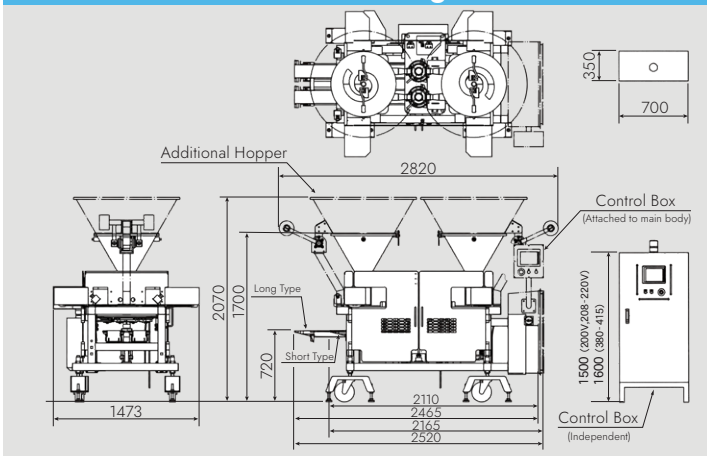

※Safety covers vary by region. ※Machine height is adjustable for the following line.

Four Rows Encrusting Model

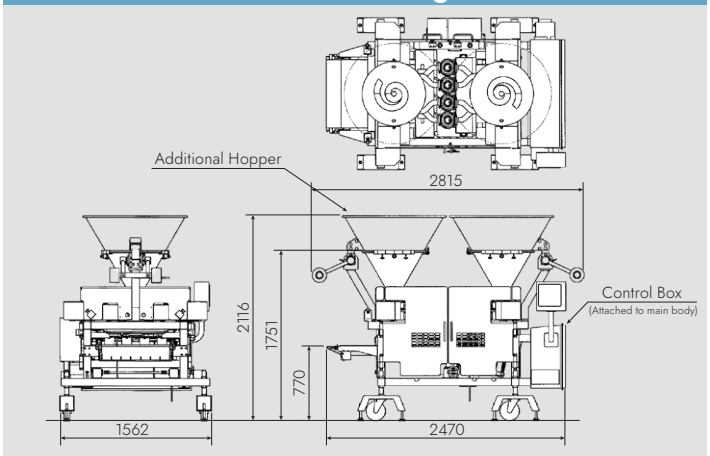

※Safety covers vary by region. ※Machine height is adjustable for the following line.

Specification / Capacity

	Two Rows Encrusting Model		Four Rows Encrusting Model	
Machine Code	MN200		MN400	
Length	With independent operation panel	2110 mm (Short Type) , 2465 mm (Long Type)	–	
	With built-in operation panel	2165 mm (Short Type) , 2520 mm (Long Type)	With built-in operation panel	2470 mm
Width	1473 mm		1562 mm	
Height	1700 mm		1751 mm	
Weight	1100 kg		1400 kg	
Electric Capacity	11.3 - 7.65 kW (Varies depending on output capacity)		12.95 - 15.15 kW (Varies depending on output capacity)	
Hopper Capacity	45 ℓ × 2 (Additional Hopper: 240 ℓ × 2)		45 ℓ× 2 (Additional Hopper: 240 ℓ × 2)	
Max. Production Speed	24000 pcs./h (200 rpm × 2 rows × 60 min)		48000 pcs./h (200 rpm × 4 rows × 60 min)	
Product Weight Range	20 - 250 g		10 - 120 g	
Max. Output	3000 kg/h (IN: 1500 kg/h, OUT: 1500 kg/h)		3000 kg/h (IN: 1500 kg/h, OUT: 1500 kg/h)	
Agitator Speed	6 speeds		6 speeds	
Belt Speed	3 - 40 m/min		3 - 40 m/min	

The specifications are subject to change without notice and without obligation.

All Rights Reserved. Reproduction, adaptation or translation without prior written permission is prohibited.

RHEON AUTOMATIC MACHINERY CO., LTD.
Head Office: 2-3 Nozawa-machi, Utsunomiya 320-0071, Japan
Phone: 028-665-1111 Fax: 028-665-3346 E-mail: info@rheon.com
URL: https://www.rheon.com
RHEON U.S.A.
2 Doppler, Irvine, CA 92618, U.S.A.
Phone: 949-768-1900 Fax: 949-855-1991 E-mail: us.info@rheon.com
URL:http://www.rheonusa.com
RHEON U.S.A. NJ BRANCH
700 Huyler Street Teterboro, NJ 07608, U.S.A.
Phone: 201-487-0600 Fax: 201-487-0610 E-mail: us.east@rheon.com
RHEON AUTOMATIC MACHINERY GmbH
Tiefenbroicher Weg 30, 40472 Düsseldorf, Germany
Phone: 0211-471950 Fax: 0211-424129 E-mail: de.info@rheon.com
URL:https://www.rheon-europe.com

RHEON AUTOMATIC MACHINERY GmbH ULM BRANCH
Saumweg 30, 89257 Illertissen, Germany
Phone: 07303-1599410 Fax: 07303-15994111 E-mail: de.info@rheon.com
RHEON AUTOMATIC MACHINERY CO., LTD. TAIWAN BRANCH
5F., No.118, Xinhu 1st Rd., Neihu District, Taipei City, Taiwan (R.O.C.)
Phone: 02-2792-3525 Fax: 02-2792-3529 E-mail: tw.info@rheon.com
RHEON AUTOMATIC MACHINERY CO., LTD. SHANGHAI OFFICE
ROOM30, 5F GIFCⅡ, 1438Hongqiao Road, changning District, Shanghai
Phone: 86-21-61976378 Fax: 86-21-61976380

©RHEON AUTOMATIC MACHINERY 2011

No.S-FNMN-001-8H 2311R (英)